TYPICAL DIMENSIONS		
4 SIDED SKIMMER		
FL-DOT C BOX 6" WALL		
TYPE	SKIMMER SIZE	PERIMETER
4C6	61 X 48	18.2'
4C12	73 X 60	22.2'
4C18	85 X 72	26.2'
4C24	97 X 84	30.2'
FL-DOT D BOX 6" WALL		
4D6	73 X 61	22.3'
4D12	85 X 73	26.3'
4D18	97 X 85	30.3'
4D24	109 X 97	34.3'
FL-DOT E BOX 6" WALL		
4E 6	78 X 60	23'
4E 12	90 X 72	25'
4E 18	102 X 84	27'
4E 24	114 X 96	31'
FL-DOT H BOX 6" WALL		
4H6	120 X 64	30.7'
4H12	132 X 76	34.7'
4H18	144 X 88	38.7'
4H24	156 X 100	42.7'

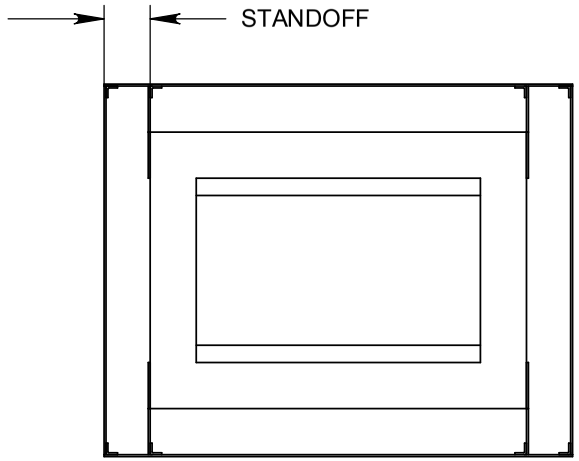

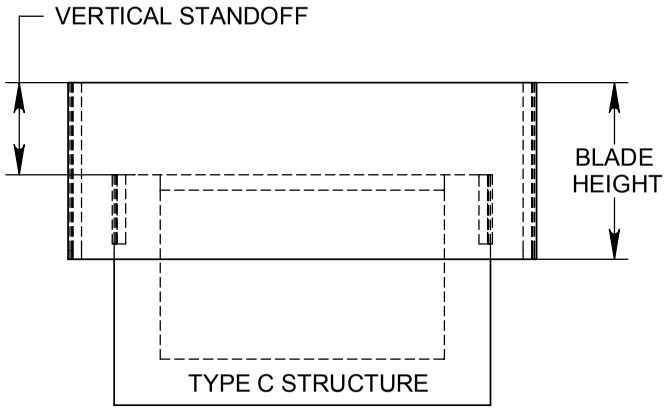

ENVIRO-GLASKIMER

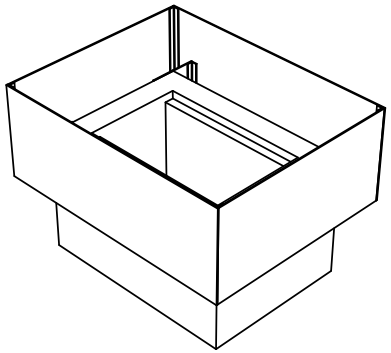

ENVIRO
4 SIDED SKIMMER

DESCRIPTION:
4 + STRUCTURE TYPE + STANDOFF X BLADE HEIGHT

EXAMPLE: 4C12 X 18" HIGH

BRACKETS:
BRACKET TYPE X STANDOFF

EXAMPLE:
ZB 12 = Z BRACKET X 12" STANDOFF
SB 18 = S BRACKET X 12" STANDOFF + 6"

MATERIAL:
ENVIRO GLASKIMER STRUCTURAL FRP AS SUPPLIED BY ENVIRONMENTAL COMPOSITES INC. TAVARES, FL 32778. PHONE- 352-343-3449

3/16" OR 1/4" THK BASED ON ENGINEERS PERFORMANCE REQUIRMENTS. FOR MORE INFORMATION SEE MATERIAL SPEC SHEET.

COLOR:
DISAPPEARING GREEN

INSTALLATION HARDWARE:
ENVIRO THEFT RESISTANT SS SPIKES 3/16" X 2"
1/4"-20 SS HEX HEAD BOLTS W/ NYLOCK NUTS

SPECIAL BRACKETS:
HIGH RISE BRACKETS USED FOR VERT. STANDOFFS MORE THAN 1/2 THE BLADE HEIGHT.
CUSTOM DESIGNED BRACKETS USED FOR STANDOFFS MORE THAN 24" AND VERT. STANDOFFS MORE THAN 36"
CONTACT ECI ENGINEERING DEPT. FOR NON-STANDARD DESIGN RECOMMENDATIONS.

Environmental Composites Inc.
4250 Lake Industrial Blvd.
Tavares, Florida 32778
(352)343-3449 Fax (352)343-5577
www.eci1usa.com

4 SIDED SKIMMER